BRISTAN

Installation Instructions & User Guide

Please leave these instructions with the end user

Product Code: NR BF C (D3)

Specifications

Dynamic Water Pressure

Min: 0.2 bar **Max:** 5.0 bar

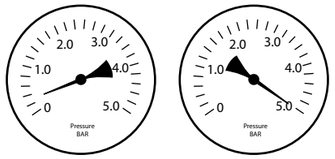

Maximum Static Pressure: 10.0 bar

Inlet Water Temperature

Cold Water Supply

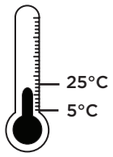

Min: 5°C Max: 25°C

Hot Water Supply

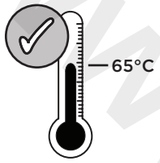

65°C Recommended

Inlet Connections

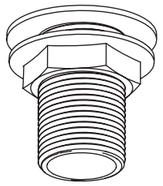

3/4" BSP

Tools You'll Need

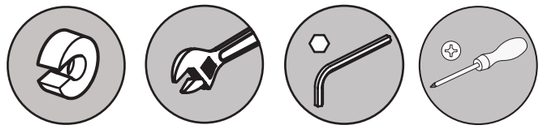

Pipe Cutter | Adjustable Spanner | Hexagonal Keys | Philips Screwdriver

Prior to Installation

All products manufactured and supplied by Bristan are safe to use provided that they are installed, operated and receive regular maintenance in accordance with these instructions.

This product needs to be installed in accordance with, and meet the requirements of the Water Supply (Water Fittings) Regulations 1999 and current by-laws. For full Installation Requirements & Notes (IRN) please visit **wras.co.uk/directory.**

Isolation valves must be fitted to the inlet water supplies to ensure ease of future maintenance.

Before installing this product the water supply must be thoroughly flushed in order to remove any swarf, solder etc.

This product must not be modified in any way as this will invalidate the guarantee.

Full access must be made available for future maintenance/servicing purposes.

If in doubt, contact a registered plumber or your Local Water Authority or the Secretary of the Institute of Plumbing, address as follows:-

The Institute of Plumbing,
64 Station Lane,
Hornchurch,
Essex,
RM12 6NB, Tel: 01708 472791

Pack Contents

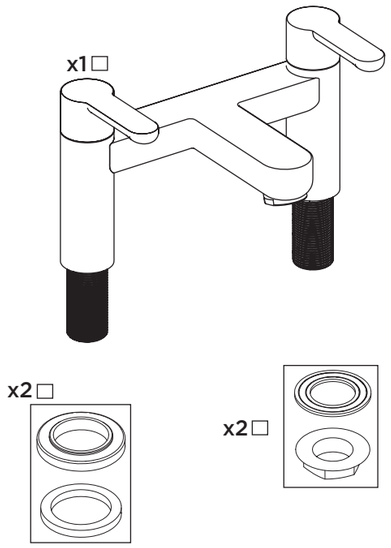

Spare Parts

To replace any spare parts for your tap, why not scan the QR Code or visit **www.bristan.com** and search for your product.

Installation

1

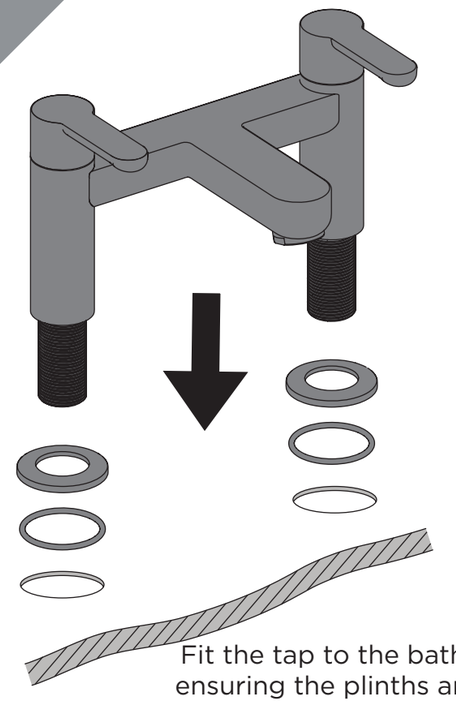

Fit the tap to the bath, ensuring the plinths are in place.

2

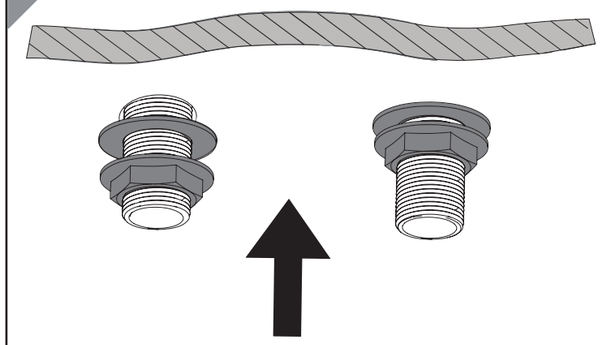

Secure the taps to the bath by using the washer and metal backnut below the bath.

Servicing Your Tap

We recommend servicing your tap at least once every year to prolong its life. To see a video showing how to remove the cartridge for servicing, scan the QR code with your smart phone or tablet.

Alternatively visit **www.youtube.com/BristanTV**

3

REMEMBER To fit isolation valves for maintenance purposes

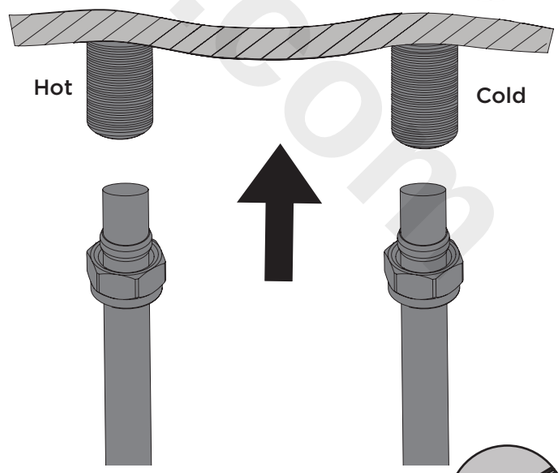

Connect the hot and cold water supplies to the threaded tails.

4

IMPORTANT Turn on water supply for a few minutes and check all joints and connections for any leaks.

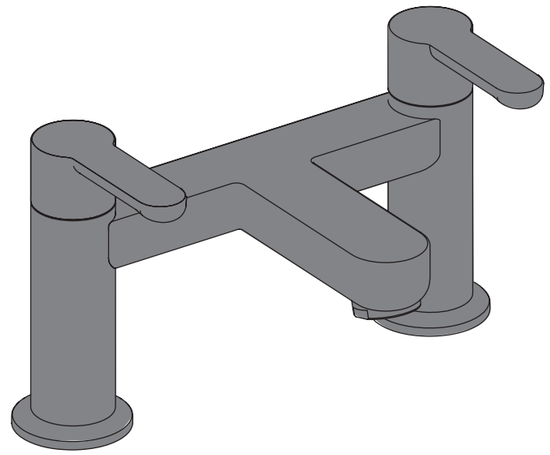

Turn on the water supply.

www.diyplumber.com

Operation

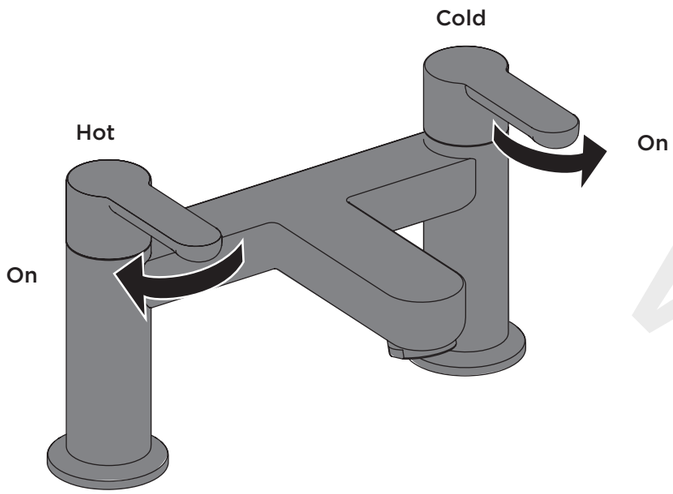

General Cleaning

Bristan products are made from premium materials, with hand polishing and electroplated finishes.

Your taps or shower should be regularly cleaned with warm water, a mild pH-neutral liquid soap, and polished with a soft cloth. Any residues from soap, toothpaste, shampoos and shower gels can cause blemishes if not rinsed off straight after use.

Household bleaches and cleaners contain harsh chemicals and may damage the surface finish. Avoid using abrasive cloths, scouring pads, scrub sponges, steel wool or anything similar.

Some surfaces such as nickel and pewter may be affected by the dye found in some cloths, so it is also important to avoid hanging cloths on spouts.

Maintenance - Clean/Replace Outlet

1

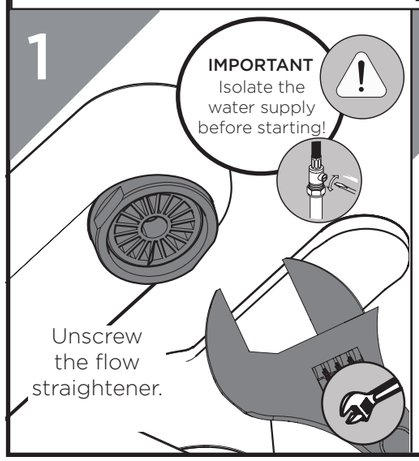

Unscrew the flow straightener.

2

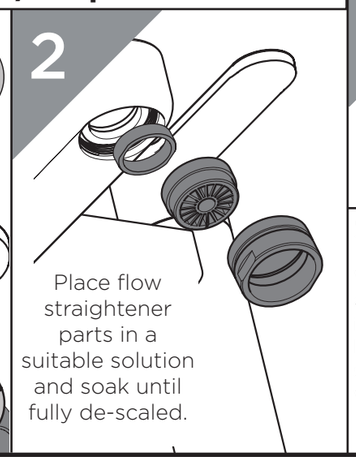

Place flow straightener parts in a suitable solution and soak until fully de-scaled.

3

Reverse the maintenance steps to replace the flow straightener

Servicing Your Tap

We recommend servicing your tap at least once every year to prolong its life. To see a video showing how to remove the cartridge for servicing, scan the QR code with your smart phone or tablet.

Alternatively visit **www.youtube.com/BristanTV**

Maintenance - Cartridge Cleaning

1

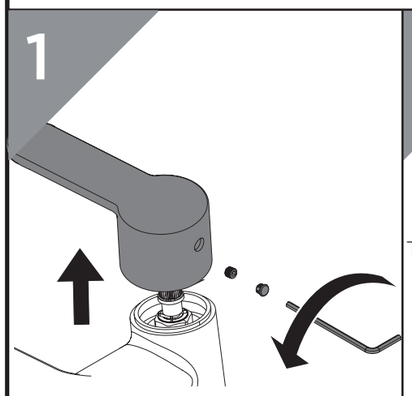

Remove cap and loosen the handle grub screws. Remove handles.

2.5 mm

2

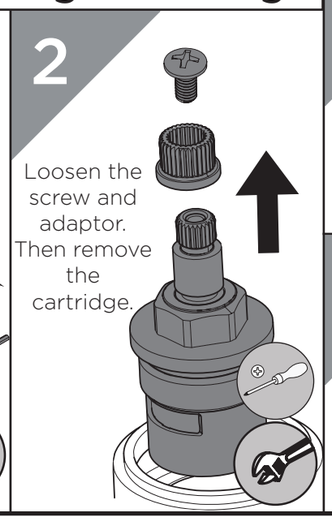

Loosen the screw and adaptor. Then remove the cartridge.

3

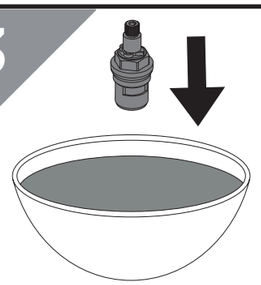

Place cartridges in a suitable solution and soak until fully de-scaled.

4

Reverse the maintenance steps to replace the handles.

Troubleshooting

Symptom	Cause	Remedy
No flow or low flow rate	Partially closed isolation valve.	Open isolation valve.
	Instantaneous water heater cycles on and off as flow rate or pressure is too low.	Increase water flow rate or pressure through system.
	Head of water is below the minimum distance required.	Refer to specification for minimum distance required.
	Hot or cold water being drawn off elsewhere causing pressure changes or instantaneous boiler temperature changes.	Do not use other water outlets when using the taps.
	Airlock or partial blockage in the supply pipework.	Flush through pipework to ensure removal of debris and any airlocks.
Water dripping from taps	This is normal for a short time after using the taps.	This is caused by residual water tension, the build up of water in the tap body.
	If water continues to drip, possibly due to the ceramic disc valves	Remove valves and clean, refer to 'Maintenance' section before starting any maintenance.
Taps do not turn on	Closed isolation valve.	Open isolation valve.
	Mains water supply turned off.	Turn on mains water supply.

Notes

Please use this space for any notes you or your installer may have regarding the installation/plumbing of this product.

At Bristan, we want to make things as easy as possible for our customers. That's why we offer solid guarantees on all our products, effective from the date of purchase, to give you peace of mind.

To start your free guarantee simply scan the QR code and register your product. Alternatively visit **www.bristan.com/register** to register your product via a computer.

For full guarantee terms and conditions visit **www.bristan.com/guarantees.**

We Know & We Care

www.pipvapor.com